FRIALEN® XL-Large Pipe Technique
for laying large pipes and relining pipe networks

NEW: up to d 1200 mm

Fitting Instructions

FRIALEN® XL

FRIATEC

Guidelines for selecting the required FRIATOOLS equipment technology for processing FRIALEN XL

You want to install this component part…	… in this dimension,…	… then you need this equipment				
		Scraper tool	Pipe rounding equipment	Electrofusion unit	Saddle clamping	Tapping
Coupler UB-XL	250 – 710	FWSG 710	FWXRH	All FRIAMAT[1]	–	–
	800 – 900	FWSG XL	FWXRH	FRIAMAT XL[3] FRIAMAT prime FRIAMAT basic	–	–
	1000 – 1200	FWSG XL	FWXRB	FRIAMAT XL[3]	–	–
Conical wedged coupler KM-XL	1000 – 1200	FWSG XL	–	FRIAMAT XL[3]	–	–
Saddle TL	250 – 560	FWSG SE up to d 315	–	All FRIAMAT[1]	FRIATOP	[2]
Spigot saddle SA-XL	315 – 1000	FWSG SE up to d 315	–	All FRIAMAT[1]	VACUSET XL	FWAB XL [2]
Repair saddle RS-XL	250 – 1000	FWSG SE up to d 315	–	All FRIAMAT[1]	VACUSET XL	–

1 Except FRIAMAT geo print
2 For tapping under pressure, contact our FRIALEN XL application-technical department
3 Input voltage range AC 400 V (3P+N+SL), generator (nominal rating) > 10 kW (at ≥ d 1000)

Contents

		Page
FRIALEN® Safety Fittings:		
1.	Safety	4
2.	Areas of Application	4
3.	Standard publications, storage and specifications for use	5
4.	Processing steps for couplers and fittings from d 250	8
5.	Processing of saddle parts Top Loading	19
6.	Working with SA-XL saddle fittings using a vacuum clamping technique	29
7.	Pipeline relining	33
8.	Update of these assembly instructions	36

For further information on the processing of FRIALEN® Safety Fittings, please contact:
FRIATEC Aktiengesellschaft
Technical Plastics Division
P.O.B. 710261 · D-68222 Mannheim
Phone +49 621 486-1486
Fax +49 621 479196
Internet: www.frialen.com
Email: info-frialen@friatec.de
Hotline +49 621 486-1486

1. Safety

1.1 Safety advice and tips

The following warning symbols are used in these assembly instructions:

DANGER!

Describes impending danger!

Non-observance of this warning may lead to serious damages to health and objects.

WARNING!

Describes a dangerous situation!

Non-observance of this warning may cause minor injuries or damage to objects.

IMPORTANT!

Describes advice and other useful information!

2. Areas of Application

FRIALEN® Safety Fittings are used for weld joints at pressure pipes made of polyethylene in

- gas pipe systems according to EN 1555, ISO 4437, DVGW GW 335
- drinking water and sewage pipe systems according to EN 12201, ISO 4427, DVGW GW 335
- as well as in general for pipings in industrial applications, geothermal applications, landfill construction and others.

For concrete information on the maximum permissible operating pressure or the processing range, please see the technical data sheets, e.g. for UB PN25.

For any deviating operating conditions, please have the suitability of FRIALEN® Safety Fittings confirmed by our Application Engineering Department, e.g.

- the fusibility of pipes with SDR beyond 17.6 - 11
- the chemical resistance to the flow medium
- the operating temperature or the operating pressure
- the use in contaminated soil

IMPORTANT!

The information and processing instructions mentioned on the fitting or enclosed shall apply predominantly.

3. Standard publications, storage and specifications for use

For detailed and up-to-date information on FRIALEN® Safety Fittings, please see the technical datasheets available on the Internet (www.frialen.com). There, you will also find the most recent versions, e.g. of the present installation instructions.

Please observe the current valid national and international pipe laying instructions

- for gas pipings, e.g. EN 12007, DVGW G472,
- for water pipings, e.g. EN 805, DVGW W400 as well as
- the accident prevention regulations, specifically when working at gas pipings, e.g. BGR 500
- hygiene requirements when handling drinking water systems
- fusion-technical guidelines, e.g. DVS2207.

Storage

The FRIALEN® Safety Fittings can be stored and processed for a very long time, provided the general storage specifications are adhered to.

Proper storage:

- in closed rooms or containers (boxes) and/or not exposed to UV radiation,
- not exposed to effects of weather such as humidity and freezing,
- storage temperature up to +50 °C.

If these requirements are met, a storage and processing period of more than four years can be assumed.

The couplers from d 250 are to be stored lying on their front to prevent any out-of-roundness.

WARNING!

Improperly stored component parts may not be processed because this may result in leaking fusion joints.

DANGER!

The described sequence of the processes is absolutely to be adhered to.

FRIALEN® Safety Fittings can be used with pipes made of **PE 100, PE 80** according to DIN 8074/75, EN 1555-2, EN 12201-2, EN 13244-2, ISO 4427 and ISO 4437. The fusible pipe series are listed by the SDR identification on the label at the fitting as well as in the technical data sheets.
For PE pipes, a fusion flow rate MFR 190/5 in the range of 0.2 – 1.7g/10 min. applies.

We recommend using pipes with a limited dimension tolerance range, tolerance class B.

FRIALEN® Safety Fittings consist of PE 100 and meet the requirements according to EN 1555-3, EN 12201-3, EN 13244-3, ISO 4427-3, ISO 8085-3 as well as DVGW GW335. FRIALEN® Safety Fittings can be fused with FRIAMAT® Electrofusion Units at ambient temperatures between - 10 °C and + 45 °C. Fittings from d 710 between 0 °C and + 45 °C.

For material transition joints, the material- or system-specific standards and installation guidelines apply in addition.

WARNING!

Fusion with other pipe materials such as e.g. PP, PVC etc. is not possible.

WARNING!

Pipes and moulded components should have settled to a balanced temperature level between - 10 °C and + 45 °C (Couplers UB d 710 between 0 °C and + 45 °C) when being processed.

IMPORTANT!

FRIALEN® Safety Fittings are identified by a batch marking.
This reads from left to right:

- Production week (KW) (stamp 1+2)
- Production year (stamp 2)
- Material identification letter (stamp 3)

Some component parts are directly identified in reading direction.

Example: KW 25/11/E

Traceability

An automatic component traceability is possible when using e.g. traceability-capable FRIAMAT® Electrofusion Units with a special barcode (see Figure 9a) which contains the specific data of the fitting, e.g. manufacturer, dimension, material, batch. These data on component traceability can be electronically archived together with the fusion process data.

IMPORTANT!

Automatic electrofusion units with barcode reading option are to be used exclusively.

3.1 Pressure load-bearing capability

The pressure load-bearing capability of FRIALEN® Safety Fittings made of PE 100 is expressed in SDR stages.

$$SDR = \frac{\text{pipe outer diameter d}}{\text{pipe wall thickness s}}$$

The design factor C (calculation coefficient for PE components) depends on the area of application and the specifications (min. 1.25).

Fitting material: PE 100 (FRIALEN® standard)	Water	Gas
SDR Stage	maximum operating pressure in bar for new: C = 1.25	maximum operating pressure in bar for new: C = 2
17	10	5
11	16	10
7.4	25	-

The parts are identified with regard to their internal pressure resistance according to the above table and are usable according to standard design (20 °C, 50 a).

DANGER!

Fusion with escaping media is not permissible.

4. Processing steps for couplers and fittings from d 250

4.1 Cutting to length of pipes

Cut off the pipe in a right angle to the pipe axis (see Figure 1). A suitable tool is a PE pipe cutter or a saw with toothing suitable for plastics.

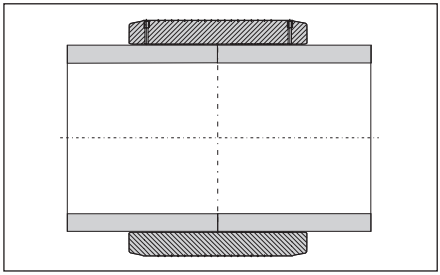

Figure 1

Distinctive conical oblique pipeends must be cut off, if necessary.

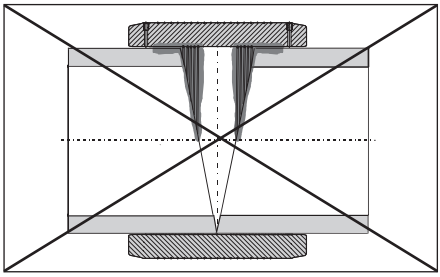

Figure 2

DANGER!

A non-rectangular pipe cutting may cause the heating coil partially not being covered by the pipe which may result in overheating, uncontrolled melt formation or self-ignition (see Figure 2).

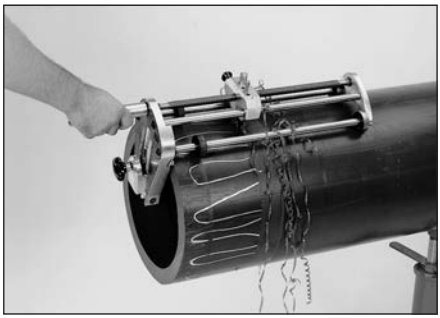

Figure 3

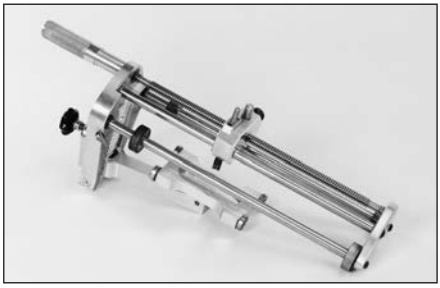

Figure 4a

Figure 4b

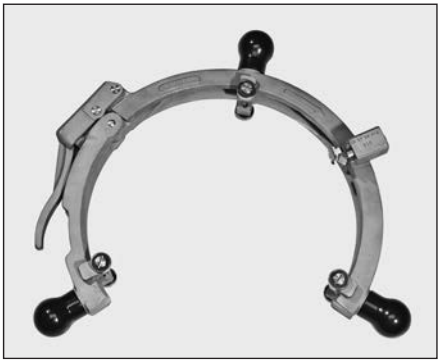

Figure 4c

4.2 Measure fusion zone, mark with a FRIALEN® marker and remove oxide layer (Fig. 3)

Fusion zone:

The length of the fusion zone corresponds to half the length of the coupler.

At first, remove contaminations from the pipe. A processing allowance of approx. + 5 mm in addition of the insertion depth provides proof after fusion that the oxide layer has been removed properly. Using a manual scraper or **FRIATOOLS® Scraper tools** (see Figure 4 a+b+c), the oxide layer, which is formed on the surface of HDPE pipes and spigot fittings during storage, has to be removed completely directly before the assembly.

IMPORTANT!

The scraper tools FWSG 710L (d 250-d 710, Fig. 4a) and FWSG XL (d 800-d 1200) facilitate the pipe processing across the entire slip-on length of the coupler. Short pipe spigots, e.g. at the fusion stub end, can be processed using FWSG 710S (Fig. 4b).

The scraper tools FWSG SE 250, 280 and 315 are proper for both, preparation of couplers-, and saddle assembly

Update: 01.10.2013

WARNING!

If the oxide layer is not removed completely, inhomogeneous, leaking fusion joints may result.

WARNING!

A FRIATOOLS® FWSG scraper tool must in all circumstances be used for fittings from d 710.

Damages to the pipe surface as e.g. axial grooves or scratches may not be located within the fusion zone.

WARNING!

An excessive swarf removal may result in an excessively large annular gap which either cannot or only insufficiently closed by fusion (for the remedy see item 4.8).

Check regularly the condition of the blade at the manual scraper and the wear of the scraper blade at the scraper tool. Worn blades must be replaced (see FRIALEN® Info No. 1).

Scraper Tool	Estimated swarf thickness (mm)	Abrasion limit (mm)
FWSG 225	0.20 - 0.35	>0.4
FWSG 710	0.30 - 0.45	>0.5
FWSG XL (d 800 - 1200)	0.40 - 0.60	>0.8
FWSG SE 250 - 315	0.20 - 0.35	>0.4

Please note that the indicated wearing margin applies to FRIALEN® Safety Fittings. Where appropriate please observe manufacturers' indications.

Filing or sanding are not permitted because contaminations are introduced.

For a control of the complete surface removal over the entire surface, we recommend to apply marking (control) lines (see Figure 3). If during scraping of the surface non-scraped areas occur at some points (e.g. in case of oval pipes), these areas are to be reworked.

The processed zone is to be protected against dirt, soap, grease, subsequently flowing water and unfavourable effects of weather (e.g. moisture, frost formation). Do not touch the fusion zone again after scraping.

WARNING!

FRIALEN® Safety Fittings with integrated heating coils guarantee optimal heat transfer through their exposed heating coils and may thus not be scraped at the inside of the fitting.

4.3 External and internal chamfering of the cutting edge (See Figure 5)

For this purpose, the manual scraper is a suitable tool. A good chamfer on the outside diameter of the face of the pipe will make it easier to fit the coupler. **Remove swarves from within the pipe.**

Figure 5

4.4 Restoration of irregular / oval pipes

Pipes typically become irregular in the course of storage. If the pipe out-of-roundness in the fusion zone exceeds a maximum of 3 mm of the outer diameter, the pipe must be rounded in the fusion zone area. Please use rounding clamps for this purpose which are installed at the end of the fusion zone (see Fig. 6), e.g. hydraulic rounding clamps FWXRH.

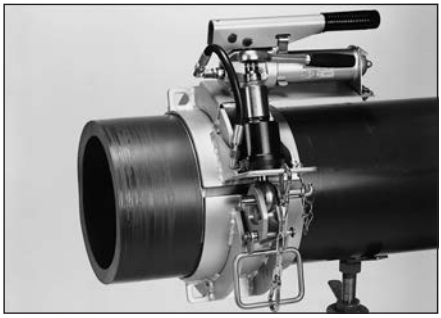

Figure 6

Update: 01.10.2013

4.5 Cleaning

The surfaces of the pipes to be fused and the interior surfaces of the **FRIALEN® Safety Fittings** must be absolutely clean, dry and free from any grease. These areas are to be cleaned with a suitable cleaning agent and **exclusively with absorbent, lint-free and non-dyed paper** directly before the assembly and after scraping (see Figure 7).

Figure 7

We recommend PE cleaning agents which are certified on the test basis DVGW-VP 603, e.g. AHK cleaning agents.

WARNING!

When using alcoholic cleaning agents, the alcohol percentage must be at least 99.8% according to DVGW-VP 603.

When cleaning, ensure that no contaminations from the unscraped pipe surface are introduced into the fusion zone.

The amount of the cleaning agent is to be chosen such that the paper is slightly wetted. Skin contact is therefore to be avoided. Please observe the safety notes of the manufacturer!

The cleaning agent **must be completely evaporated** before starting the fusion process.

Now, using the **FRIALEN® marker,** re-mark the line (approx. 120 ° distributed around the circumference) to show the width of the fusion zone on the pipe since this will have been removed by scraping and cleaning.

The joint surfaces must be clean and dry before installing the fitting. The cleaned fusion zone should not be touched with bare hands. Moisture in the area of the joint area, e.g. because of dew or frost, is to be removed using suitable aids.

The fusion fitting is to be removed from the packaging only directly before the planned processing. The packaging protects the fittings against external influences during transport and storage.

4.6 Inserting spigot or pipe ends into the fitting.

When the **FRIALEN® Safety Fittings** and pipes are being assembled care should be taken to ensure that the contact sockets are accessible to allow connection of the fusion plug. Assembly can be assisted by tapping around the face with a plastic hammer at the same time. **When assembling do not tilt.** The worked insertion end must be pushed into the fitting up to the mark. If necessary rounding clamps should be used (see Figure 6).

Repeated scraping of the outer diameter might be necessary if the tolerance is big. Repeated scraping may not be performed to remedy installation problems due to out-of-roundness!

If the fitting cannot be slipped on without using force despite the above described procedure, a repeated scraping is permitted. (see item 4.4).

A simple control of the high points is possible by installing the coupler and evaluating the annular gap.

4.7 Ensuring a tension-free assembly of the components

All joints prepared for fusion must be tension-free. Pipes may not be positioned in the **FRIALEN® Safety Fitting** under bending stress or self-load.

If required, the piping or the fitting is to be supported or suitable fixing facilities are to be used. The tension-free fixing of the joint is to be maintained until the cooling time stated on the barcode and in the table is reached. (see item 4.9).

Before starting the fusion process, check again based on the markings whether the position of the pipe insertion end in the FRIALEN® Safety Fitting has shifted (correct, if required).

Update: 01.10.2013

WARNING!

A non-tension-free or shifted joint may result in an impermissible melt flow and a defective joint during fusion (see Figure 8).

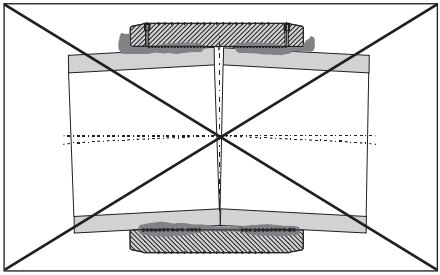

Figure 8

4.8 Pre-heating for reducing the annular gap between coupler and pipe.

Using the preheating barcode for couplers ≤ UB d 450 as well as UB PN25 ≥ d 280 after ring gap assessment (> 1 mm), the pipe can be adjusted to the coupler.

WARNING!

For couplers from d 500, the preheating barcode must be used.

UB-XL ≥ d 1000: For the couplers UB-XL ≥ d 1000, preheating and fusion are integrated in one single process. The 2-phase jointing process is controlled with a special barcode.

WARNING!

Only use fusion units which have been approved by the manufacturer with regard to their function for the processing of FRIALEN® Safety Fittings. See DVS 2207-1.

For couplers from d 710, FRIAMAT® electrofusion units, for UB-XL couplers ≥ d 1000 FRIAMAT XL electrofusion units must be used exclusively.

Preheating barcode for UB ≤ d 900 (see also instruction leaflet enclosed with the component part).

The ring gap between the coupler and the pipe can be compensated to a certain extent by using a specifically matched preheating barcode (Figure 9). The maximum bridgeable distance between the coupler and the pipe may not exceed 3 mm

Figure 9

across the entire circumference. For the coupler mounted and centred at the pipe, this means: Δ d ≤ 6 mm. For relining slide-over couplers REM d110/DN100 and d160/DN150, a maximum gap of 2 mm applies. The thermal reduction of tensions in the joining area has also a positive effect on the fusion result.

Procedure:

1. Preparation of the joining area corresponding to the FRIALEN® installation instructions for large pipes and pipe network relining.
2. Centre the coupler on the pipe such that the ring gap across the circumference is as equal as possible. If required, support the coupler.
3. Close the ring gap with adhesive tape to prevent heat losses.
4. Close open pipe ends.
5. Standard processing:
   I. Preheating of first coupler side, record yellow barcode with FRIAMAT® electrofusion unit and start the process; then
   II. preheating of second coupler side, record yellow barcode with FRIAMAT® electrofusion unit and start the process; then
   III. first coupler side: check the ring gap: if it is still too large, the preheating can be repeated 2 x maximum. If ok: Start **fusion of first coupler side**, (white barcode), then
   IV. second coupler side: check the ring gap: if it is still too large, the preheating can be repeated 2 x maximum. If ok: Start **fusion of second coupler side**, (white barcode)

WARNING!

Between preheating and fusion, a waiting time is always required to ensure heating through of the component parts. This waiting time corresponds approximately to the preheating or fusion time, depending on the dimension approx. 15-30 minutes. If only one coupler side is to be processed, the waiting time between preheating and fusion is to be observed.

If the waiting time is exceeded by more than the double time, the described process is to be repeated.

Update: 01.10.2013

4.9 Carrying out the fusion

Figure 9a

WARNING!

Only use fusion units which have been approved by the manufacturer with regard to their function for the processing of FRIALEN® Safety Fittings. See DVS 2207-1.

Use FRIAMAT® fusion units only for FRIALEN® UB from d 710, for UB-XL ≥ d 1000 couplers only FRIAMAT-XL fusion units! Please observe operating instruction for FRIAMAT XL.

For the fusion of the coupler d 800 and d 900 please observe our FRIALEN® Info No. 42.

The fusion parameters are contained in the main barcode affixed to the **FRIALEN® Safety Fitting**. When using fully automatic fusion units (e.g. **FRIAMAT®**), the parameters are entered into the fusion unit using the reader or barcode scanner.

The subordinated barcode contains the data for component traceability. This barcode is to be read if the component traceability function is to be used. This requires suitable fusion units.

The fusion units automatically monitor the fusion process and control the supplied energy in determined limits.

Information:

The fusion parameters are encoded on the barcode label in the form of a 24-digit figure (top), the data for component traceability in the form of a 26-digit column of numbers (bottom), and can also be entered manually into the FRIAMAT® fusion unit using the emergency entry mode.

Information:

Fusion units FRIAMAT® L, FRIAMAT® LE and FRIAMAT GEO are not suitable for the fusion of large couplers.

For fittings with separate coils (see Figure 10), each fitting side is to be fused separately.
For fittings with continuous coil, both fitting sides are to be fused simultaneously (see Figure 11).

FRIALEN® Safety Fittings are equipped with a swell indicator, this only gives an indication that fusion has taken place. This swell indicator signalises the fusion process, by changing its colour (red) and by increase of volume. The proper progress of the fusion process, however, is only shown by the fusion unit.

After reading of the barcode, the fitting data are to be compared with the data shown on the unit's display. If they are identical, **start fusion**. Please observe the operating instruction of the FRIAMAT® fusion unit.

Avoid stress on the connecting spot.

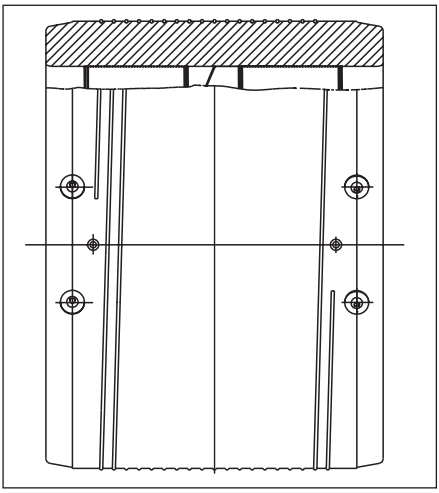

Figure 10

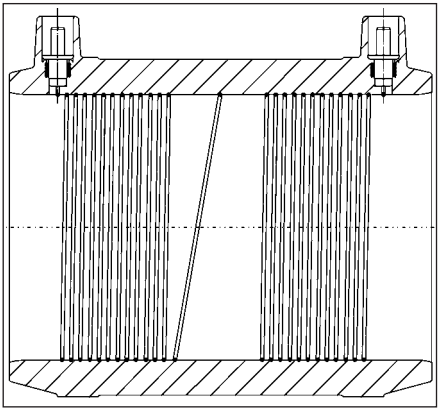

Figure 11

Update: 01.10.2013

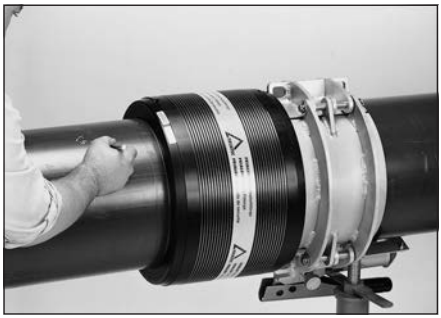

Figure 12

WARNING!

Keep a distance of one meter to the fusion site during the fusion process for general safety reasons.

The obtained **actual fusion time** is to be compared with the **target fusion** time on the unit and to be noted on the pipe or the **FRIALEN® Safety Fitting** (See Figure 12).

With this identification it is ensured that no fusion point is overlooked.

In case of interruption a fusion can be repeated. But the joint surfaces must be cooled down to ambient temperature before each renewed fusion. Please contact for this purpose your local FRIALEN® sales engineer by phone or the FRIALEN® Hotline.

4.10 Cooling times.

The cooling time is

a) the time which is required to cool down the component to the temperature which facilitates the movement of the joint. This time is also listed on the barcode and is identified by CT.

b) the time which is required to cool down the component to the temperature which facilitates the application of the full test or operating pressure. This is classified into pressure volumes of up to 8 bar and > 8 bar.

WARNING!

When inserting piping (e.g. relining) it is the cooling time before pressurising which is important.

Diameter in mm	Cooling time in minutes for FRIALEN® couplers and fittings		
	CT until the joint may be moved	Up to pressurising at up to 8 bar	Up to pressurising at > 10 bar
250 – 355	30	75	100
400 – 710	40	95	120
800 – 1200	90	200	240

Information:

A piping may only be commissioned after successful pressure test (e.g. EN 805, EN 12007 and DVGW G 469, W 400).

Information:

The detachment of the outer armouring wire during the cooling down stage is caused by the thermal expansion characteristics of the fused joint and does not present a problem.

5. Processing of saddle parts Top Loading

FRIALEN® TL saddle parts are used with pipes from SDR 17 to SDR 11 from d 250 mm. The processing occurs with the FRIATOP Clamping Unit (Figure 15b).

5.1 DAA-TL Pressure Tapping Tees - Top Loading, d 250 - 315 (400)

FRIALEN® Pressure Tapping Tees Top-Loading DAA-TL are suitable for fitting as branch connectors onto unpressurised or pressurised pipelines.

Update: 01.10.2013

WARNING!
FRIALEN® pressure tapping valves ≥ d 355 mm may be processed using only SDR 17 and SDR 17,6 pipes due to tapping technique.
Processing temperature: between 0 °C and 45 °C.

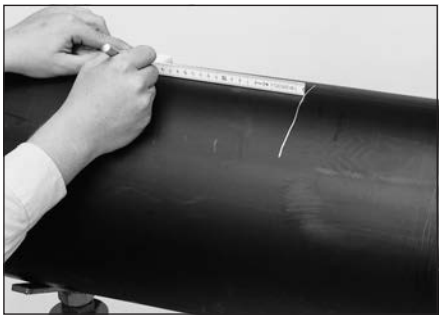

Figure 13

5.1.1 Measuring of fusion zone of the pipes (and the lateral outlet spigot), marking (Figure 13) and removing oxide layer

The fusion zone: is the area of pipe covered by the saddle; for a side outlet it is the insertion depth on the smooth pipe spigot. The oxide layer in the area of the fusion zone, which has formed on the surface of the HDPE pipes during storage, must be **totally** removed with a hand scraper (Figure 14) or a scraper tool e.g. FWSG SE (Figure 14a) immediately **before** assembly.

A processing allowance of several millimetres in addition to the covered area provides proof after fusion that the oxide layer has been properly removed from the pipe.

WARNING!
If the oxide layer is not removed completely, leaking fusion joints may result.

Worn blades of the scraper tool and manual scraper must be replaced.

A one-time, complete removal is sufficient (min. 0.15 mm). A uniform surface without flattening and sharp edges at the pipe diameter should be the result.

WARNING!
Filing or sanding of the pipe is not permitted because contaminations are introduced.

For a control of the complete surface removal over the entire surface, we recommend to apply marking (control) lines (see Figure 14). If during scraping of the surface non-scraped areas occur at some points, these areas are to be reworked.

Figure 14

The processed zone is to be protected against dirt, soap, grease, subsequently flowing water and unfavourable effects of weather (e.g. moisture, frost formation).

5.1.2 Cleaning

The surfaces of the pipes to be fused and the interior surfaces of the **FRIALEN® DAA-TL Pressure Tapping Tees Top-Loading** must be absolutely clean, dry and free from any grease. These areas are to be cleaned with a suitable cleaning agent and **exclusively with absorbent, lint-free and non-dyed** paper directly before the assembly and after scraping.

Figure 14a

We recommend PE cleaning agents which are certified on the test basis DVGW-VP 603, e.g. AHK cleaning agents.

WARNING!

When using alcoholic cleaning agents, the alcohol percentage must be at least 99.8% pursuant to DVGW-VP 603.

When cleaning, ensure that no contaminations from the unscraped pipe surface are introduced into the fusion zone.

The amount of the cleaning agent is to be chosen such that the paper is slightly wetted. Skin contact is to be avoided. Please observe the safety notes of the manufacturer!

The cleaning agent **must be completely evaporated** before starting the fusion process.

Update: 01.10.2013

Subsequently, re-apply marking line for the fusion zone width with the **FRIALEN® marker** because this line was removed during scraping and cleaning. The joint surfaces must be clean and dry before installing the fitting. The cleaned fusion zone should not be touched with bare hands. Moisture in the area of the joint area, e.g. because of dew or frost, is to be removed using suitable aids.

The fusion fitting is to be removed from the packaging only directly before the planned processing. The packaging protects the fittings against external influences during transport and storage.

5.1.3 Assembly

- Place the saddle onto the prepared surface of the pipe.
- Fit the adapter of the FRIATOP clamping device (Figure 15a).
- Fit the clamping device as directed in the Operating Instructions (Figure 15b).

Figure 15a

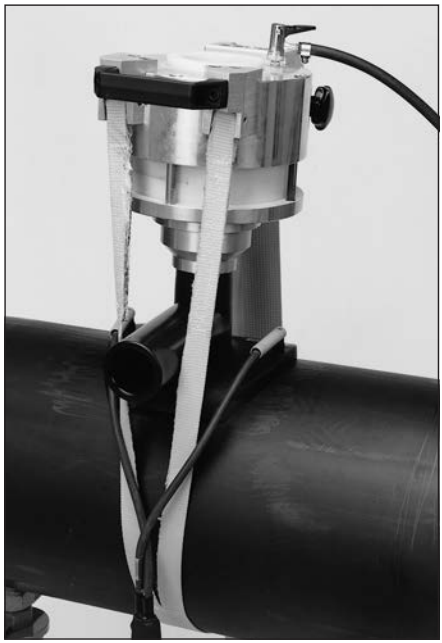

Figure 15b

WARNING!

For pressure tapping tees and pressure tapping valves, the factory drill setting may not be changed before starting the fusion process.

5.1.4 Carrying out of fusion

When fusing **Pressure Tapping Tees** to media-carrying pipings, the following operating pressures may not be exceeded until the pipe has cooled down completely:

Pipe material	PE 80		PE 100	
SDR	17	11	17	11
Maximum permissible working pressure in bar				
Gas pipe	2	5	5	10
Water pipe	8	12.5	10	16

WARNING!

Only use fusion units which are authorised by their manufacturer to process FRIALEN® Safety Fittings as part of their function. See DVS 2207-1.

The fusion parameters are contained in the main barcode affixed to the **FRIALEN® Safety Fitting**. When using fully automatic fusion units (e.g. **FRIAMAT®**), the parameters are entered into the fusion unit using the reader. After reading of the barcode, the fitting data are to be compared with the data shown on the unit's display. If they are identical, **start fusion**. Please observe the operating instruction of the FRIAMAT® fusion unit.

The fusion units automatically monitor the fusion process and control the supplied energy in determined limits.

The swell indicator only indicates to the performed fusion process. The proper fusion process is, however, only indicated by the fusion unit!

WARNING!

Keep a distance of one meter to the fusion site during the fusion process for general safety reasons.

The obtained ACTUAL fusion time is to be compared with the target fusion time on the unit and to be noted on the pipe or the FRIALEN® Safety Fittings.

With this identification it is ensured that no fusion point is overlooked.

After the fusion process has finished always maintain the jointing pressure for a 10 minute cooling period!

5.1.5 Removing of FRIATOP clamping unit, tapping and application of test and operating pressure

WARNING!

Before FRIATOP clamping unit is removed after the fusion process the specific cooling time has to be observed, according to table:

Diameter in mm	Cooling time in minutes for FRIALEN Top-loading saddle fittings		
	before removing FRIATOP clamping unit	Up to pressurisation via outlet	CT Up to tapping
≥ 250	10	50	60

The cooling time CT stated on the fitting bar code corresponds to the cooling time until tapping.

WARNING!

If the waiting times are not observed, leaking fusion joints may result. The general installation instructions must be observed before tapping.

5.1.6 Tapping of Pressure Tapping Tees

Remove blanking plug. Turn the drill down up to the lower stop using the matching FRIALEN® activating key (AF 19) (See Figure 16).

Turn the drill backwards up to the upper stop. Position the blanking plug and turn down the FRIALEN® activating key until the collar of the plug **slightly touches** the front face of the drill spigot.

Subsequently, turn back the plug **half a turn** to relieve the O-ring tension.

Figure 16

WARNING!

If the collar is excessively tightened, the plug may break or the hexagonal seat may be overwound. In this case, the plug has to be replaced.

We recommend closing the tapping dome with a fusion cap K. The required scraping and cleaning are to be performed (see items 4.2 - 4.8).

5.1.7 Tapping of DAV-TL pressure tapping valves d 250 - d 400 (Figure 17)

Installation, fusion and cooling times as 5.1 et seq.

Tap by turning the 14 mm square spanner clockwise up to lower end position. The valve is now closed. In order to open the valve, the tap must be moved anti-clockwise up to the end position. After arriving the end position turn back approx. half a rotation.

Figure 17

The metal end points for the “open” or “shut” positions of the valve lead to a distinctly noticeable increase in the activating force. As sealing takes place in the closed position using a radially injected O-ring, it is not necessary to apply a great deal of pressure when closing the valve.

Install the FRIALEN® Installation Kit EBS on the 14 mm square of the DAV-TL and secure the splint against pull out. Set the required overlapping height on telescoping frame. Telescoping frame may be adjusted by sliding scale and will stop securely at any point. The **FRIALEN® EBS** is technically perfectly adapted to the **FRIALEN® DAV-TL.**

5.2 VAM-RG-TL Valve Tapping Saddles d 250 - 315 (560)

5.2.1 Assembly

The preparation of the installation and the fusion process is made analogue to the **FRIALEN® Pressure Tapping Tee** (see 5. to 5.1.4).

Figure 18

WARNING!

The fusion range of the saddle covers the dimensions d 250 up to d 560. If necessary application technology restrictions must be considered by drill tool. Details of these components, given by manufacturer, have to be regarded.

The cooling times are to be observed (see item 5.1.5 **Pressure Tapping Tee**).

The fitting is drilled using a suitable close-off device or fitted with a valve in accordance with the relevant Fitting Instructions from the different valve manufacturers. The preparation and conduct of the pressure test are carried out in accordance with the details given by the valve manufacturer.

The threaded components fitted at the factory must be **secured with a spanner to prevent them from twisting.**

Care should be taken to ensure that the insulation work is carried out in accordance with the regulations (DVGW Standard Publication).

5.3 SPA-TL Shut off Saddles Top-Loading d 250 - 315 (560)

5.3.1 Assembly

WARNING!

The fusion dimensions of the component includes d 250 - d 560. If necessary application technological restrictions have to be regarded. For example by borer tool or balloon. Details of these components, given by manufacturer, have to be regarded. Processing temperature: between 0 °C and 45 °C.

FRIALEN® Shut-off Saddles (see Figure 19) are prepared for installation and fused analogue to **FRIALEN® Pressure Tapping Tees** (see Chapters 5.1.1 – 5.1.4). The tapping of the pipe can be made after cooling down (see item 5.1.5) and observing the installation instructions of the tapping/shut-off saddle installation equipment of the relevant manufacturer.

Figure 19

Installing the brass plug
The plug is to be screwed in such that the O-ring seals in the dome. In the end position, the plug protrudes from the dome sleeve by approx. 1.5 mm (Fig. 20). Screwing in requires a torque of approx. 150 Nm. This can be obtained using a suitable tool aided, if required, by a lever.

Figure 20

After fitting the brass plug either the plastic nut must be screwed on or a **FRIALEN® cap for Shut off Saddles** must be fused on, ensuring that the usual scraping and cleaning work is carried out (see Figure 21).

Figure 21

5.4 SA-TL Spigot Saddles Top-Loading d 250 - 560

5.4.1 Assembly

The preparation of the installation and the fusion process is made analogue to the **FRIALEN® Pressure Tapping Tee** (see 5.1.1 - 5.1.5).

Figure 22

Update: 01.10.2013

WARNING!

The tapping is made with commercially available tapping units in an unpressurised state with or under pressure using shut-off valves.

We recommend the tapping unit of the company of Hütz + Baumgarten, Remscheid (www.huetz-baumgarten.de), especially designed for this purpose.

Please ask our FRIALEN® Application Engineering Department.

The manufacturer's installation instructions are to be observed.

5.5 VSC-TL Repair Saddle Top-Loading d 250 - 560

5.5.1 Assembly

For localised damage to the pipe at a single point the damaged spot can be sealed off with a plug and then fused with the repair Saddle Top-Loading.

Figure 23

The preparation of the installation and the fusion process of the individual half shells is made analogue to the **FRIALEN® Pressure Tapping Tee** (see 5.1.1 - 5.1.5).

WARNING!

Care must be taken to ensure that during assembly the damaged or deformed point on the pipeline lies in the centre of the heating element and is at least 10 mm away from the interior heating coil.

Fusion with escaping media is not permissible.

5.6 AKHP-TL Tapping Ball Valves d 250 - d 560

AKHP-TL Tapping Ball Valves allow the drilling of unpressurised or pressurised pipelines.

Figure 24

WARNING!

The fusion zone of the component includes the dimensions d 250 - d 560. If necessary application technological restrictions have to be regarded. For example by borer tool or balloon, normally applicable up to d 315 SDR 11. Details of these components, given by manufacturer, have to be regarded.

5.6.1 Assembly

The preparation of the installation and the fusion process of the tapping ball valve AKHP is made as saddle component analogue to the **FRIALEN® Pressure Tapping Tee** (see items 5.1.1 - 5.1.5).

INFORMATION:

For a leakage-free tapping of pressurised pipings, we recommend the tapping unit of the company of Hütz + Baumgarten, Remscheid (www.huetz-baumgarten.de). Please ask our Application Engineering Department.

The telescopic **FRIALEN®-actuation key BS** is particularly designed for the technical and geometrical requirements of the KHP ball valve.

6. Working with SA-XL saddle fittings using a vacuum clamping technique

FRIALEN® spigot saddles SA-XL are used as tapping tees for connecting branch piping to main pipelines. They are suitable for use with standard piping with a diameter of > 250 mm.

The VACUSET XL can be deployed in a temperature range between -10°C and +45°C and up to a maximum altitude of 1000 m. Please contact our Application Engineering department regarding any deviating operating conditions.

Update: 01.10.2013

Temporary discrepancy in the installation instructions:
The tapping tees are clamped onto the pipe with a vacuum technique using a vacuum pump, which is provided by FRIATEC.

The tapping tees are clamped onto the pipe with a vacuum technique using the FRIATOOLS VACUSET XL. A compressor is required to create the vacuum.

WARNING!
Please observe the compressor manufacturer's instructions with regard to permitted ambient operating temperatures.

Non-pressurised piping is tapped using the FRIATOOLS drilling device FWAB XL. The piping must be completely drained (without any medium) before tapping it.

Special tapping equipment is required for tapping pressurised piping; please contact our Application Engineering department for information.

6.1 Assembly

The preparation for fusing saddle parts is the same as for the FRIALEN® pressure tapping tee (see sections 5.1 - 5.5).

WARNING!
The assembly using the vacuum clamping technique is described in the FRIATOOLS VACUSET XL operating instructions.
Place the FRIALEN XL spigot saddle SA-XL with the saddle area on a clean surface (e.g. on a box) and assemble the equipment as described below.

- Insert the plunger into the flanged outlet and seal the pipe spigot (see Fig. 25)

Figure 25

- Connect the vacuum hoses (Fig. 26).
- Switch the compressor on. Check the usability of the components, taking particular care to ensure that the hose connections do not leak and (where applicable) that the fill levels of the fuel tanks for the generator and the compressor are satisfactory.
- Place the FRIALEN® spigot saddle XL onto the prepared surface of the pipe. Make sure that the seal in the saddle is positioned correctly!

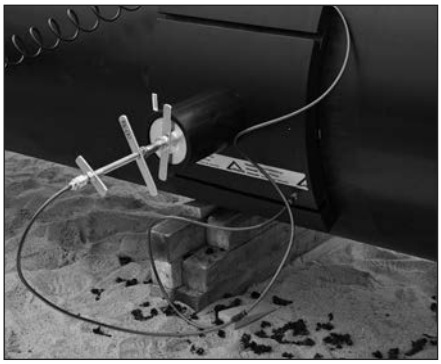

Figure 26

Figure 27

IMPORTANT!

It may not be possible to create a vacuum with excessively oval piping. Then press the saddle onto the pipe using two tensioning straps by positioning them on the sides of the saddle and aligning them so they are straight. When a constant vacuum of at least -0.8 bar is displayed, loosen the tensioning belts and remove them.

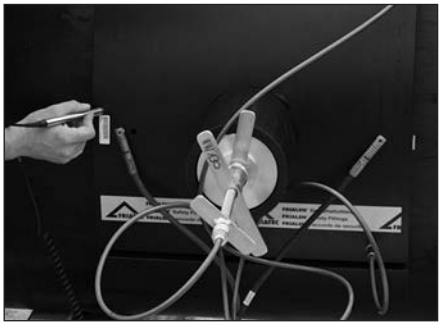

Figure 28

- Make sure that the FRIALEN® spigot saddle XL is positioned correctly.
- The vacuum must be at least -0.8 bar (absolute < 0.2 bar) during the entire procedure (approx. 45 minutes) until the end of the cooling period (see Fig. 27).
- The saddle must initially be clamped onto the pipe under a vacuum for a holding time of **at least 2 minutes.**
- Make a note of the holding time on the pipe or fitting.
- Start the preheating process after reading in the yellow barcode.
- Make a note of the preheating time on the pipe or fitting.

Update: 01.10.2013

- **Start the fusion cycle straight after the preheating process has finished** (Fig. 28).
- Make a note of the fusing time on the pipe or fitting.
- After the fusion cycle has been completed, **the parts must cool down for 30 minutes while clamped under vacuum.**
- Make a note of the cooling time and the manometer reading on the pipe or fitting.

6.2 Tapping

Depressurised and completely drained pipes are tapped using the FRIATOOLS drilling device FWAB XL.

The following waiting times must be observed:

Diameter in mm	Cooling time in minutes for FRIALEN® saddle fittings XL	
	From the end of the fusion cycle until tapping (clamped under vacuum)	Until pressurisation via the outlet (CT)
315 – 1000	30	60

The cooling times (CT) labelled on the components correspond to the cooling time until the pipe is ready for tapping.

WARNING!
observe the instructions in the operating instructions for the FRIATOOLS drilling device FWAB XL!

Explosion hazard!
It is forbidden to tap pipes containing explosive mixtures (e.g. residual gas, sewer gas).

Electrical hazard!
Make sure that there is no residual water or any other medium in the piping, particularly when tapping the bottom of the pipe for drainage connections.

The medium could flow straight into the drill during tapping.

7. Pipeline relining

7.1 Procedures and areas of application

Defective old pipelines made of cast iron, steel or other conventional materials can be renovated by drawing in an HDPE pipe, as an alternative to laying new pipes.

Standard pipes are used for the **relining process** and are joined using suitable FRIALEN® Safety Fittings.

For the so-called close-fit process (lining with precisely fitting pipes), however, the pipes which are used have a cross section which has been changed in the manufacturing process (e.g. U-liners) or on the building site itself (e.g. Swage lining). The outside diameter of these pipes is matched to the inside diameter of the old pipeline and thus deviates from the standard.

The ends of each renovated section of pipeline can be fused with **FRIALEN® REM Relining Slide-over Couplers.**

At points where it is scheduled to fuse on a coupler or a saddle the relining pipe should be sized to the nominal inside diameter during the reshaping by fitting half shells.

7.2 REM Relining Adapter Couplers

One end of the **REM Relining Adapter Coupler** (Figure 25) is matched to the dimensions of the pipes used for this process. The other end corresponds to the standard pipe size. This allows renovated sections of pipeline to be connected using fitted pieces of standard pipe. The fittings are used like slide-over couplers.

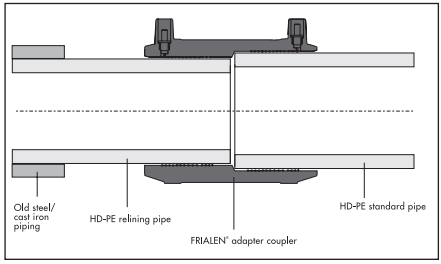

Figure 29

7.3 Fitting and fusion

7.3.1 Relining using HDPE standard pipes

When joining standard pipes the appropriate FRIALEN® Safety Fittings are used. The fitting and fusion is carried out in a similar fashion to that in item 4. For couplers > d 250 mm preheating in accordance with item 4.8 is recommended when there are larger annular gaps.

Update: 01.10.2013

7.3.2 Close-fit relining

After the renovation the HDPE pipes used will often exhibit deviations both in their diameter and from the ideal round shape in the area of the proposed joint. Depending on the characteristics of the pipe the joint can be made using a preheating code, and also in conjunction with a support sleeve or a pipe expander tool.

7.3.3 Pre-heating: Procedure see item 4.8

7.3.4 Support sleeve

In case of larger deviations in shape or size on the ends of the pipes in the area of the joint the use of support sleeves is recommended (Figure 26). The fitting can then be used as a slide-over coupler.

For fitting the support sleeve a suitable pipe expander tool has to be employed (Figure 27). Before using the pipe expander tool deviations in shape must be taken into account. The expander shells should be positioned to give an optimum rounding effect.

The design of the support sleeve is dependent on the medium flowing, the material and the pipe size.

The fitting of coupler and sleeve will be made easier if the pipe tolerances are taken into account when deciding on the size. **The use of preheating in accordance with item 6.3.3 will then be essential.**

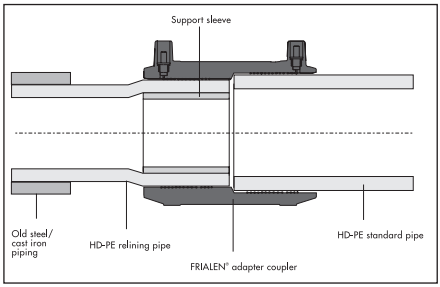

Figure 30

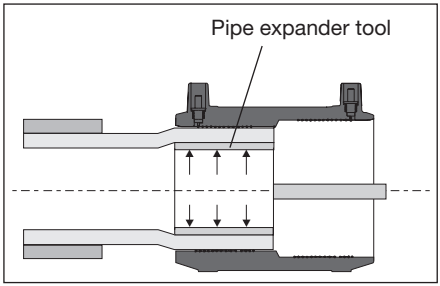

Figure 31

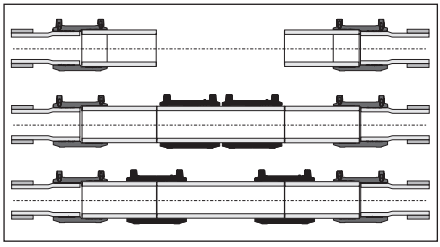

Figure 32

7.3.5 Use of a pipe expander tool as a temporary support sleeve

If a support sleeve is not wanted the coupler can be fused using a suitable pipe expander tool, matched to the size of the pipe. Use of the preheating barcode (see item 6.3.3) is particularly important to reduce the stresses in the pipe. The tool must remain in place during the fusion process and until the cooling period has passed.

7.4 Cooling times

For cooling times item 4.10 is applicable.

7.5 Relining fittings and clips (top loading)

Figure 33

When fitting saddle components (Figure 29) care must be taken with any ovality or flattening of the HDPE pipe. In order to achieve a uniform surface pressure, and thus a proper fusion, the radius of curvature on the inner liner at the site of the proposed joint must correspond to the diameter range d of the moulded component being used. If necessary the saddle must be brought into line either axially or radially. For the particular fitting dimension please refer to our FRIALEN® product range.

The assembly of the saddle components occurs according to items 5.1.1 to 5.1.6

Before the renovation the old pipe should be cut away at the point where a moulded saddle component is to be fused to the inner liner pipe. The pipe diameter will be brought to size at the proposed jointing point by fitting half shells.

When fitting a house connection at some later point access to the inner liner is gained by using a window cutter to get through the old pipe.

8. Update of these assembly instructions

Further operating and assembly instructions are available:

- FRIALEN® Safety Fittings for House Service and Supply pipings up to d 225
- FRIAFIT® Sewage System
- FRIAMAT® Electrofusion Units
- FRIATOOLS® Scraper Tools
- FRIATOP Clamping Unit
- FWFIT Clamping and Tapping Tool
- VACUSET XL Vacuum clamping unit
- FWAB XL Drilling device
- FWXRH Rounding clamp
- FWXRB Rounding clamp

These technical statements are regularly revised to be up-to-date. The date of the last revision is stated on the document. You will find the updated operating instructions on our website www.friatec.com as pdf documents. We will also mail them to you on request.

FRIATEC Aktiengesellschaft · Technical Plastics Division
P.O.Box 71 02 61 · D-68222 Mannheim
Phone: +49 621 486-1486 · Fax: +49 621 479196
E-Mail: info-frialen@friatec.de · www.friatec.com

FRIATEC
an Aliaxis company